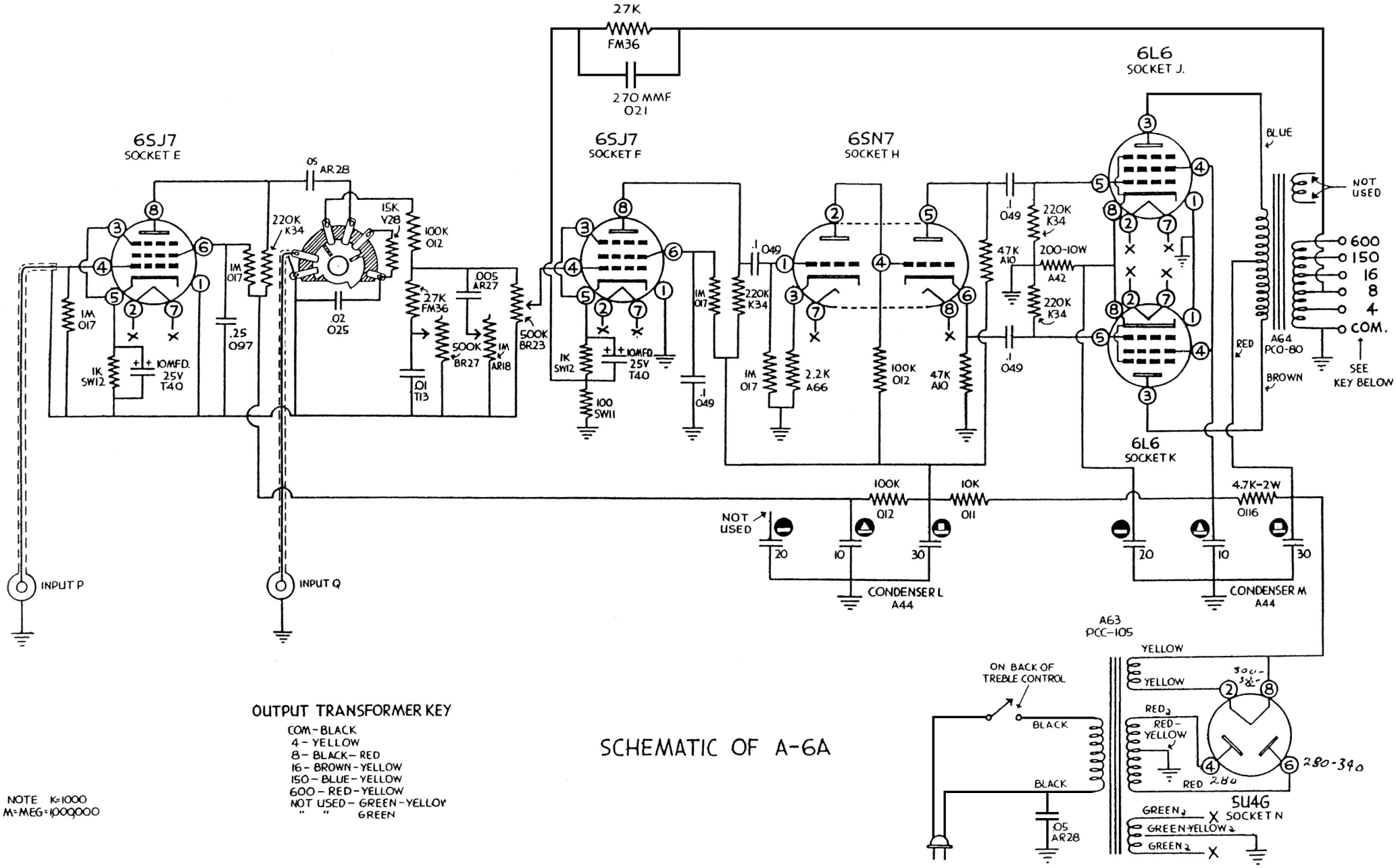

OUTPUT TRANSFORMER KEY

COM - BLACK
4 - YELLOW
8 - BLACK - RED
16 - BROWN - YELLOW
150 - BLUE - YELLOW
600 - RED - YELLOW
NOT USED - GREEN - YELLOW
" " GREEN

SCHEMATIC OF A-6A

NOTE K=1000
M=MEG=1000000