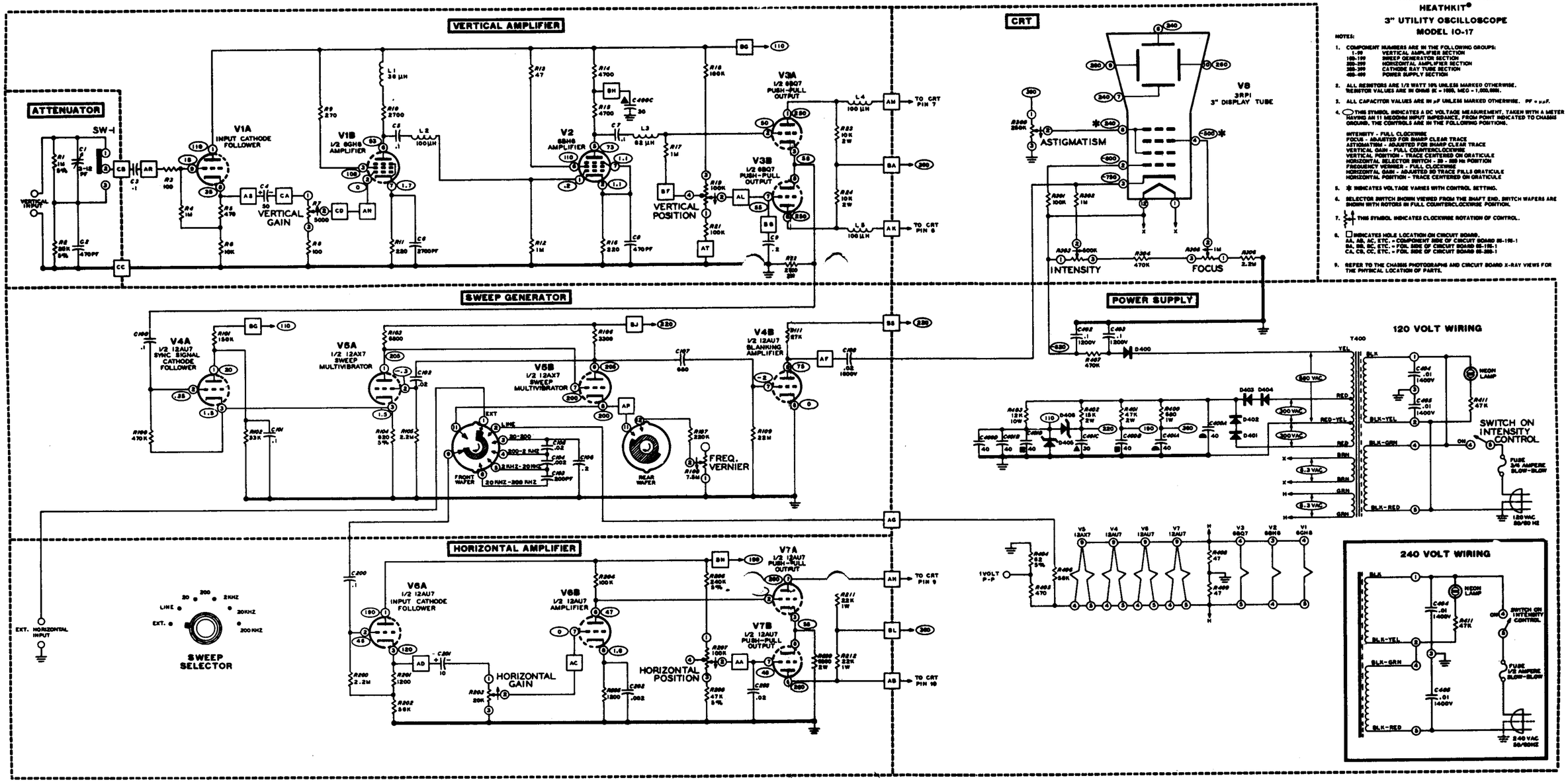

SCHEMATIC OF THE HEATHKIT® 3" UTILITY OSCILLOSCOPE MODEL IO-17

NOTES:

1. COMPONENT NUMBERS ARE IN THE FOLLOWING GROUPS:
   - 1-99 VERTICAL AMPLIFIER SECTION
   - 100-199 SWEEP GENERATOR SECTION
   - 200-299 HORIZONTAL AMPLIFIER SECTION
   - 300-399 CATHODE RAY TUBE SECTION
   - 400-499 POWER SUPPLY SECTION
2. ALL RESISTORS ARE 1/2 WATT 10% UNLESS MARKED OTHERWISE. RESISTOR VALUES ARE IN OHMS K = 1000, MEG = 1,000,000.
3. ALL CAPACITOR VALUES ARE IN μF UNLESS MARKED OTHERWISE. PF = μμF.
4. ⬭ THIS SYMBOL INDICATES A DC VOLTAGE MEASUREMENT, TAKEN WITH A METER HAVING AN 11 MEGOHM INPUT IMPEDANCE, FROM POINT INDICATED TO CHASSIS GROUND. THE CONTROLS ARE IN THE FOLLOWING POSITIONS.

   INTENSITY - FULL CLOCKWISE
   FOCUS - ADJUSTED FOR SHARP CLEAR TRACE
   ASTIGMATISM - ADJUSTED FOR SHARP CLEAR TRACE
   VERTICAL GAIN - FULL COUNTERCLOCKWISE
   VERTICAL POSITION - TRACE CENTERED ON GRATICULE
   HORIZONTAL SELECTOR SWITCH - 20 - 200 Hz POSITION
   FINEQUENCY VERNIER - FULL CLOCKWISE
   HORIZONTAL GAIN - ADJUSTED SO TRACE FILLS GRATICULE
   HORIZONTAL POSITION - TRACE CENTERED ON GRATICULE
5. ✱ INDICATES VOLTAGE VARIES WITH CONTROL SETTING.
6. SELECTOR SWITCH SHOWN VIEWED FROM THE SHAFT END. SWITCH WAFERS ARE SHOWN WITH ROTORS IN FULL COUNTERCLOCKWISE POSITION.
7. THIS SYMBOL INDICATES CLOCKWISE ROTATION OF CONTROL.
8. □ INDICATES HOLE LOCATION ON CIRCUIT BOARD.
   AA, AB, AC, ETC. = COMPONENT SIDE OF CIRCUIT BOARD 05-198-1
   BA, BB, BC, ETC. = FOIL SIDE OF CIRCUIT BOARD 05-198-1
   CA, CB, CC, ETC. = FOIL SIDE OF CIRCUIT BOARD 05-388-1
9. REFER TO THE CHASSIS PHOTOGRAPHS AND CIRCUIT BOARD X-RAY VIEWS FOR THE PHYSICAL LOCATION OF PARTS.