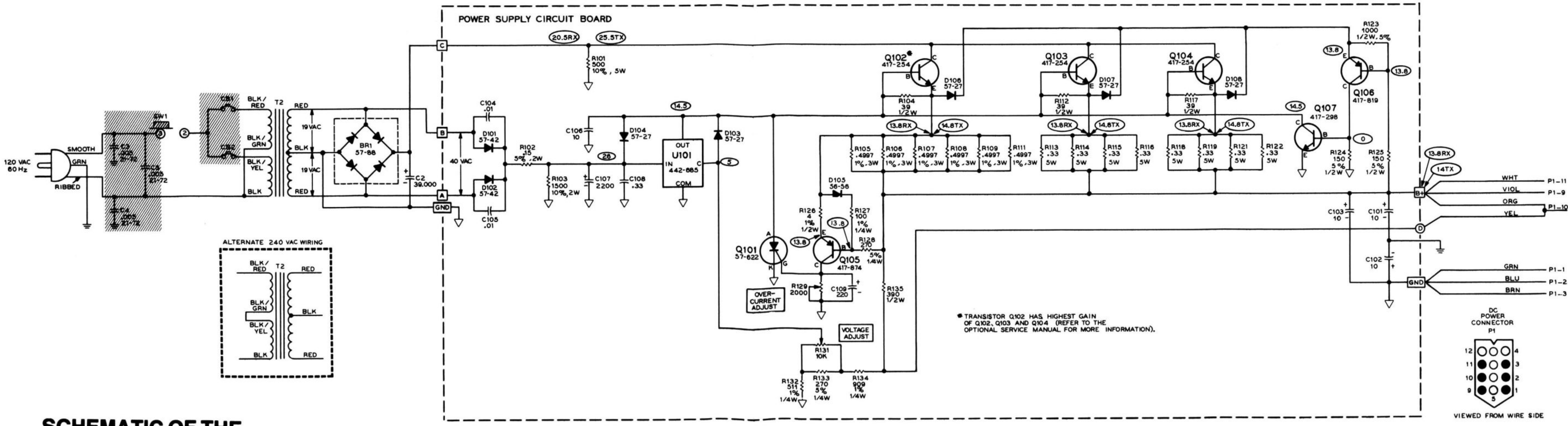

SCHEMATIC OF THE HEATHKIT® POWER SUPPLY Model PS-9000

1. COMPONENT NUMBERS ARE IN THE FOLLOWING GROUPS.
   1-99 CHASSIS MOUNTED PARTS.
   100-199 PARTS MOUNTED ON THE POWER SUPPLY CIRCUIT BOARD.
   200-299 PARTS MOUNTED ON THE CLOCK CIRCUIT BOARD.
2. ALL RESISTORS ARE IN OHMS (K= 1000).
3. ALL CAPACITORS ARE IN µF.
4. ☐ THIS SYMBOL WITH A LETTER IN IT INDICATES A WIRE CONNECTION TO THE CIRCUIT BOARD.
5. ⏚ THIS SYMBOL INDICATES CIRCUIT BOARD GROUND.
6. ⏚ THIS SYMBOL INDICATES CHASSIS GROUND.
7. ⬭ THIS SYMBOL WITH A NUMBER IN IT INDICATES THE DC VOLTAGE TO CHASSIS GROUND FROM THE POINT INDICATED. READINGS SHOULD BE VALID FOR ALL NORMAL POWER SUPPLY OPERATING CONDITIONS.
8. COMPONENTS IN THE SHADED AREAS ARE CRITICAL TO CONTINUED PRODUCT SAFETY. REPLACE THEM ONLY WITH PARTS OF THE SAME RATING OR WITH PROPER HEATH REPLACEMENT PARTS.
9. THE CLOCKS MAY BE INDIVIDUALLY CHANGED TO INDICATE IN A 12-HOUR FORMAT. TO CHANGE THE CLOCKS, REMOVE OR CUT THE FOLLOWING JUMPER WIRES:

   a. LEFT-HAND CLOCK

      K TO L
      M TO N
      P TO Q
      F TO G
      D TO E

   b. RIGHT-HAND CLOCK
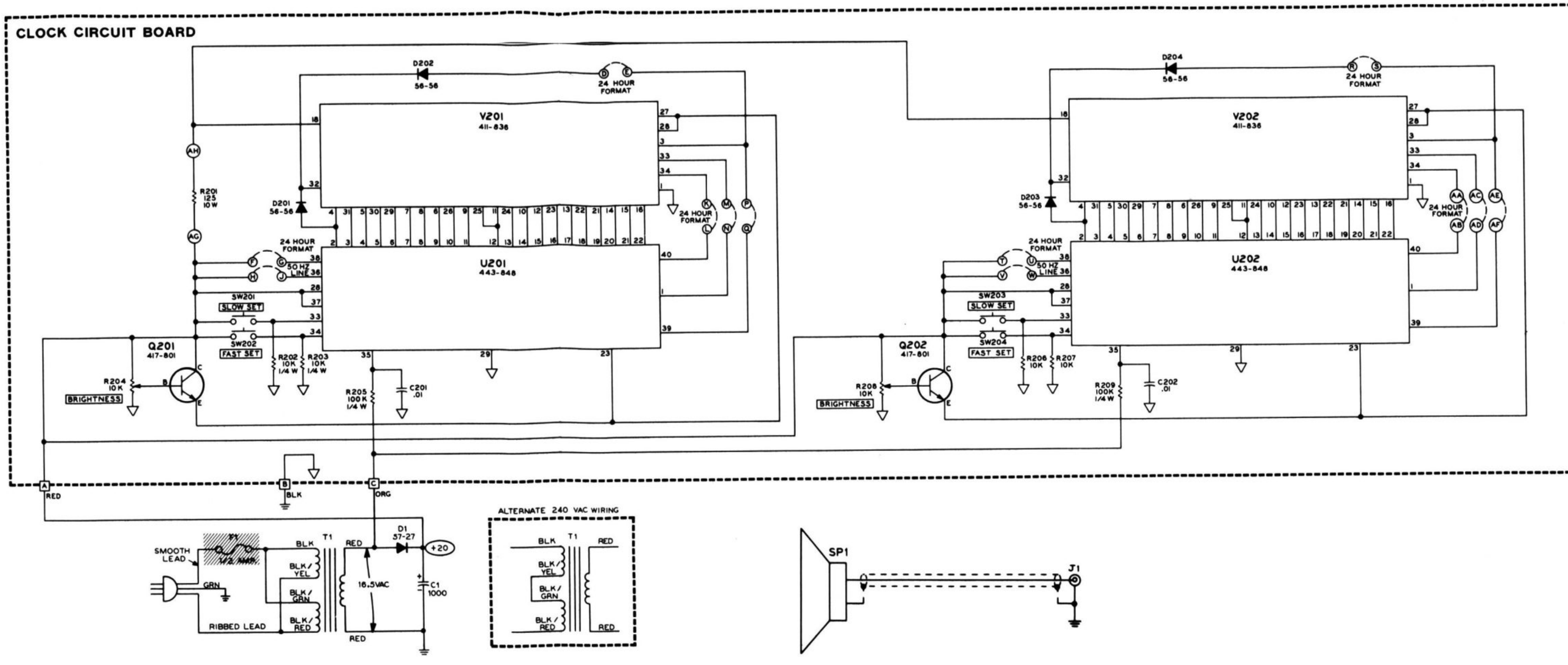
      AA TO AB
      AC TO AD
      AE TO AF
      R TO S
      T TO U