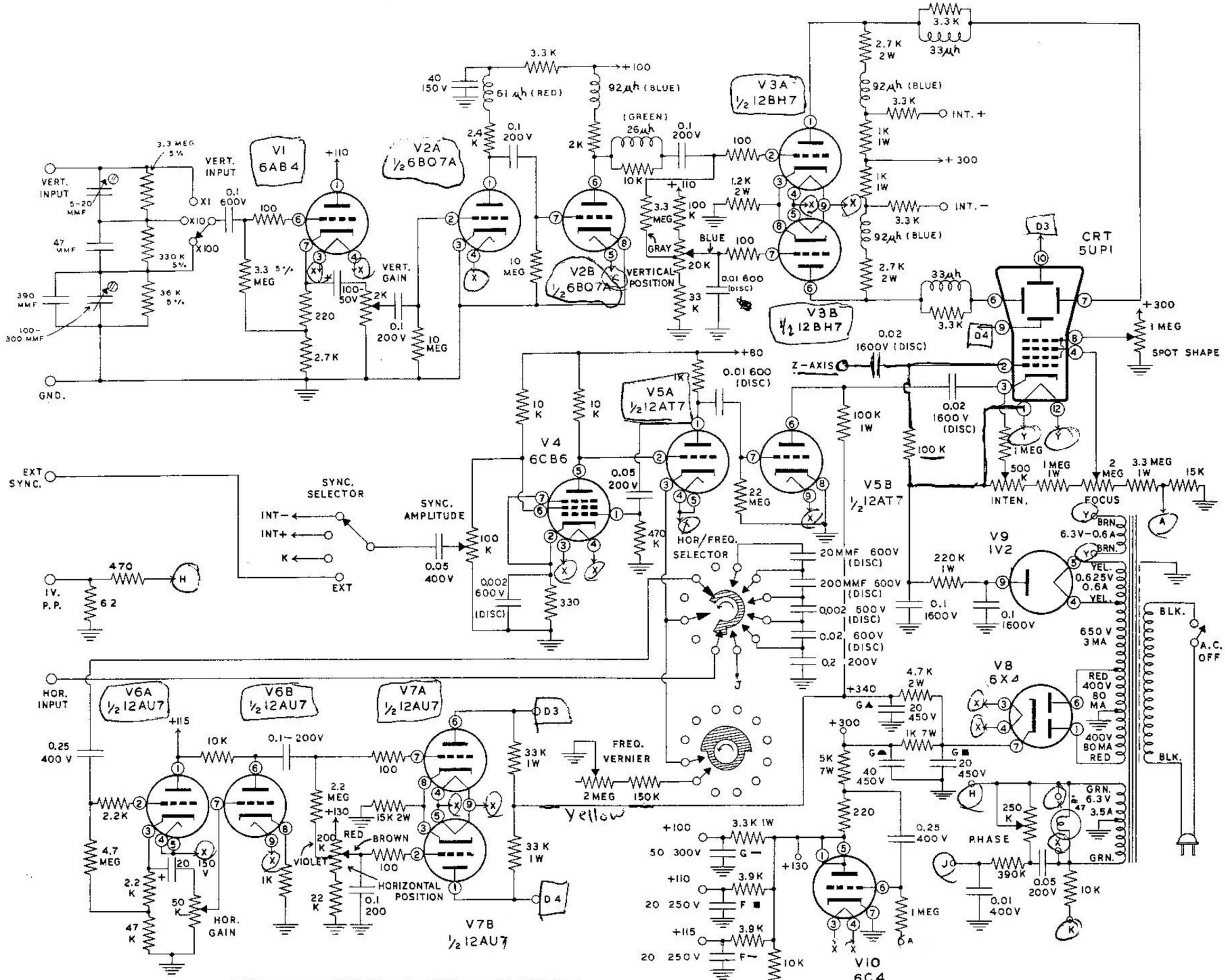
V1 6AB4
V2A ½ 6BQ7A
V2B ½ 6BQ7A
V3A ½ 12BH7
V3B ½ 12BH7
CRT 5UP1
V4 6CB6
V5A ½ 12AT7
V5B ½ 12AT7
V6A ½ 12AU7
V6B ½ 12AU7
V7A ½ 12AU7
V7B ½ 12AU7
V8 6X4
V9 1V2
V10 6C4
VERT. INPUT
VERT. GAIN
VERTICAL POSITION
Z-AXIS
SPOT SHAPE
INTEN.
FOCUS
EXT SYNC.
SYNC. SELECTOR
SYNC. AMPLITUDE
HOR/FREQ. SELECTOR
HOR. INPUT
HOR. GAIN
HORIZONTAL POSITION
FREQ. VERNIER
PHASE
A.C. OFF
GND.
1. All switches shown in full CCW position.
2. All resistors marked in ohms and are 1/2 watt unless specified.
3. All condensers marked in µfd and are paper dielectric unless specified.
4. Multipliers: K x 1000, MEG. x 1,000,000