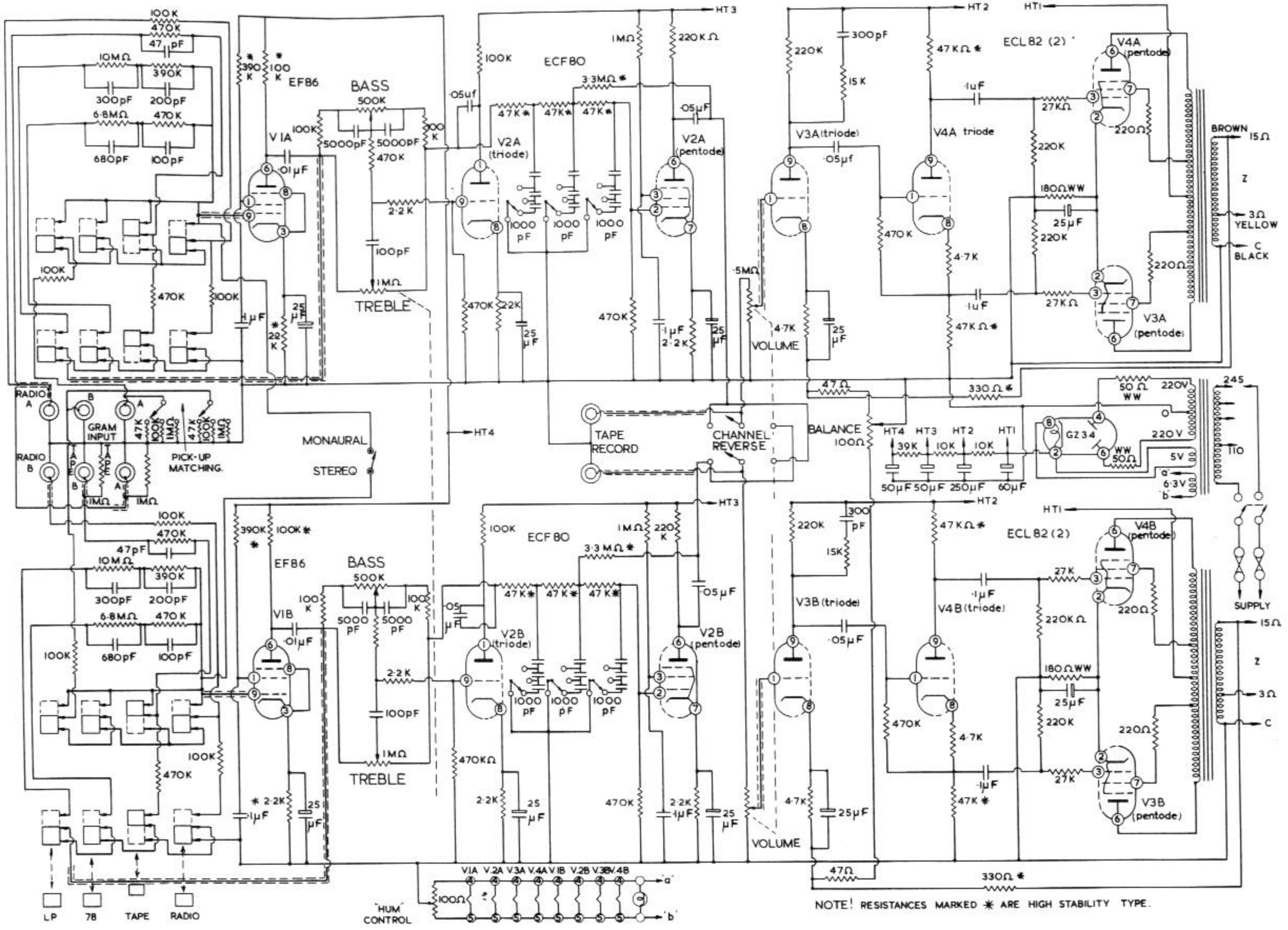

Heathkit MODEL S.88 STEREOPHONIC SOUND AMPLIFIER CIRCUIT DAYSTROM LTD. GLOUCESTER, ENGLAND